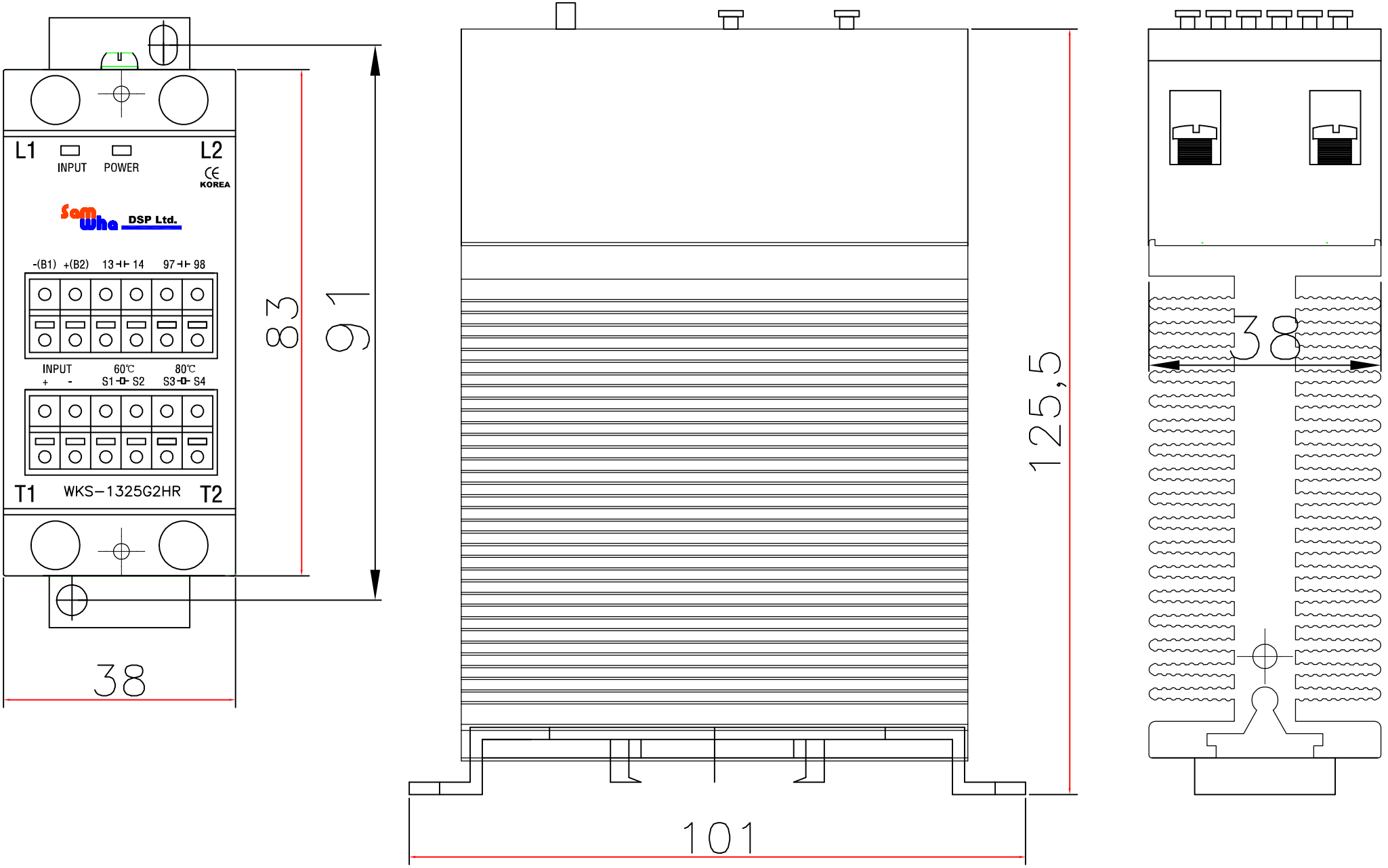
L1
INPUT
POWER
L2
KOREA
SamWha DSP Ltd.
-(B1) +(B2) 13 14 97 98
INPUT
+ -
60℃
S1 S2
80℃
S3 S4
T1
WKS-1325G2HR
T2
83
91
38
125.5
101
38

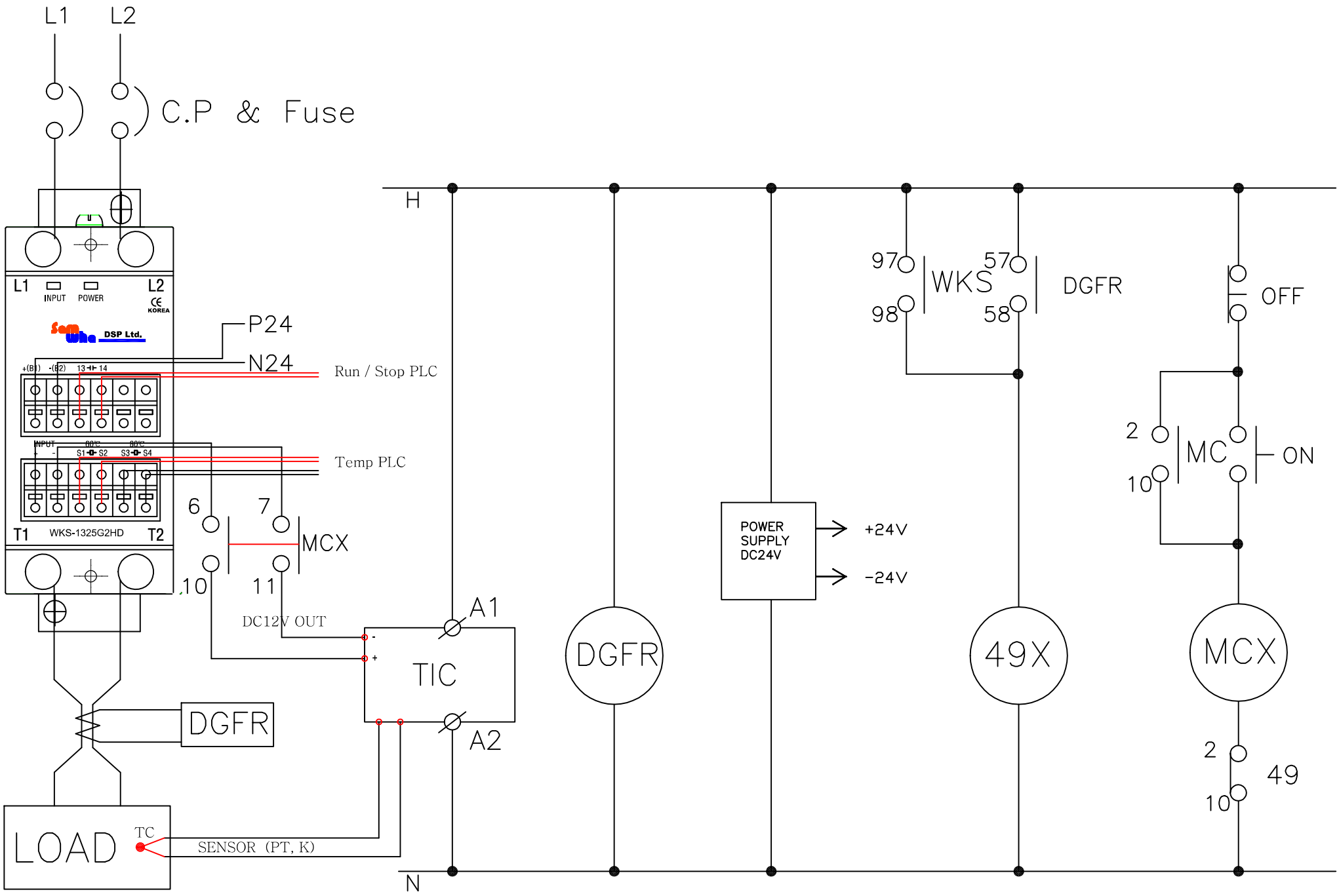
L1
L2
C.P & Fuse
L1
INPUT
POWER
L2
KOREA
DSP Ltd.
P24
N24
Run / Stop PLC
Temp PLC
T1
WKS-1325G2HD
T2
6
7
MCX
10
11
DC12V OUT
A1
TIC
A2
DGFR
LOAD
TC
SENSOR (PT, K)
H
N
DGFR
POWER SUPPLY DC24V
+24V
-24V
97
98
WKS
57
58
DGFR
49X
OFF
2
10
MC
ON
MCX
2
10
49